Lexy

Ax1	Bx1
Cx2	Dx1
Ex26 (8*20)	Fx1
Gx6	Hx8 (8*40)
Ix1	Jx2
Kx1	Lx1
Mx4	Nx4 (8*50)
Ox2	Px2
Qx2 85cm	Rx1
Sx4 2. 5cm	Tx4 (5*50)

1

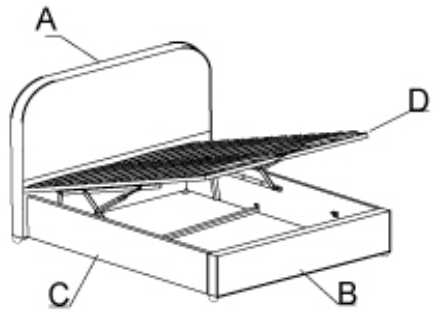

2

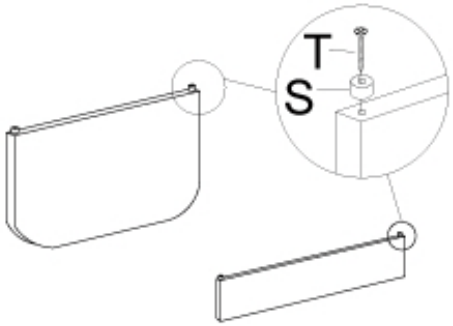

3

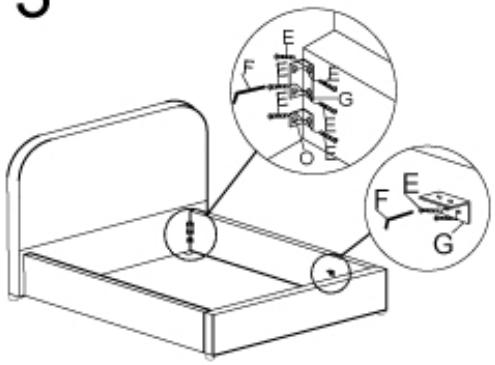

4

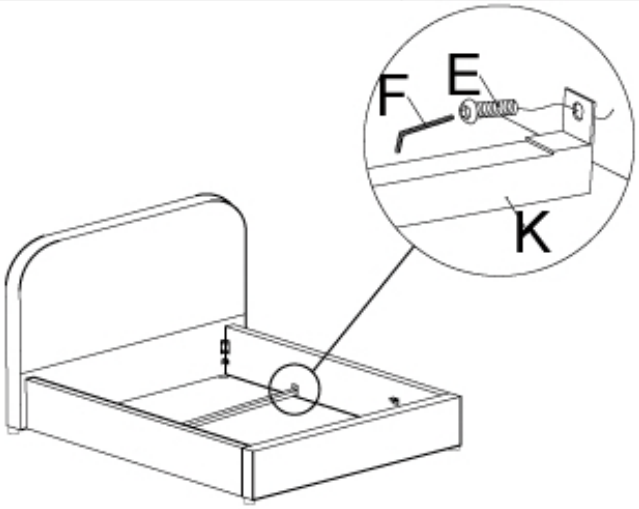

5

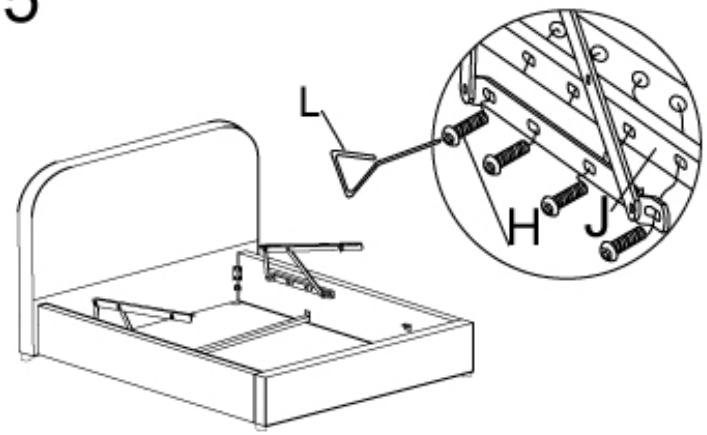

6

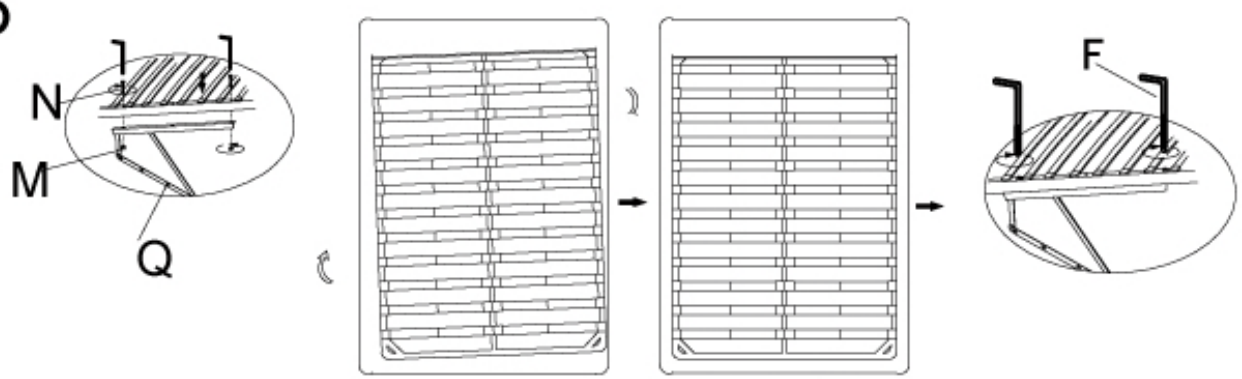

7

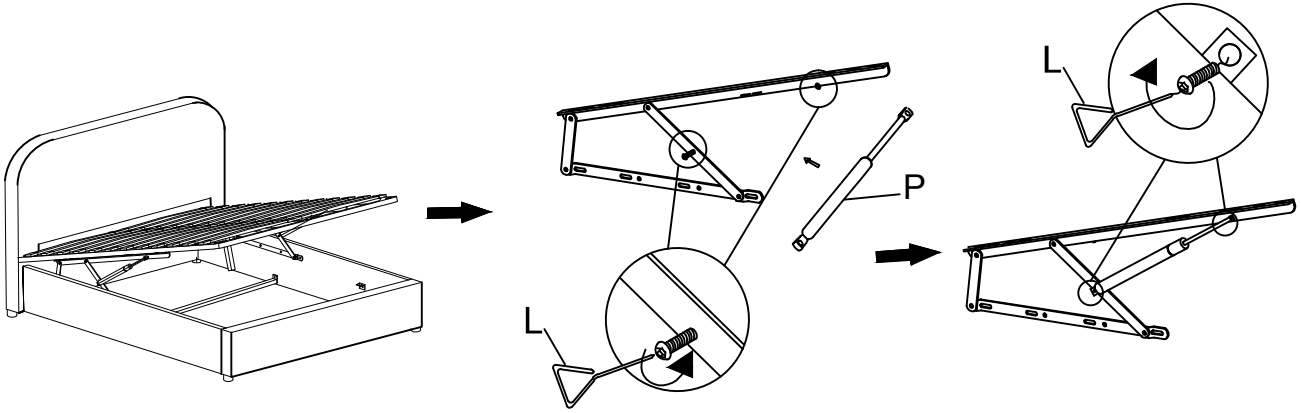

8

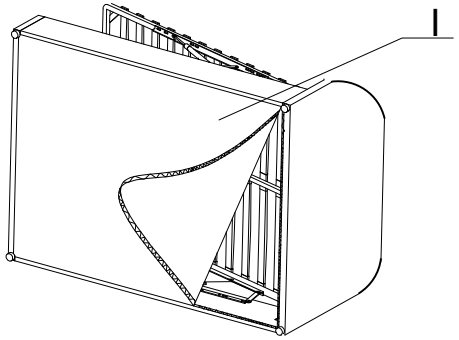

9

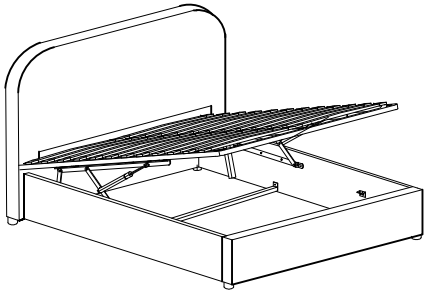

200cm

(1) x1	(2) x2
(3) x2	(4) x1
(5) x26	(6) x26
(7) x13	(8) x2
(9) x12	(10) x14 (8*45)
(11) x1	

1

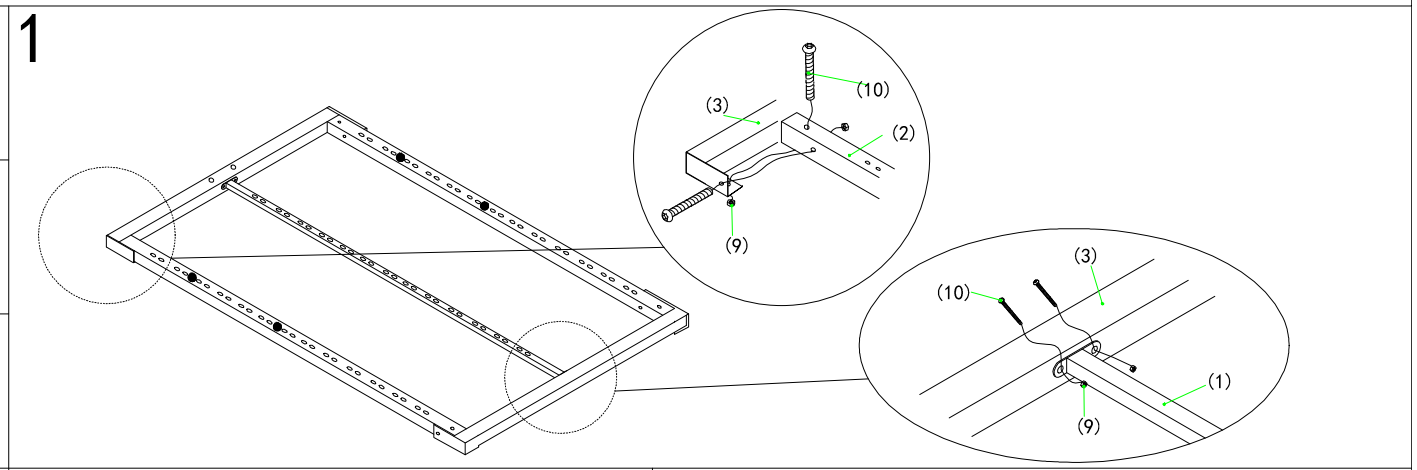

2

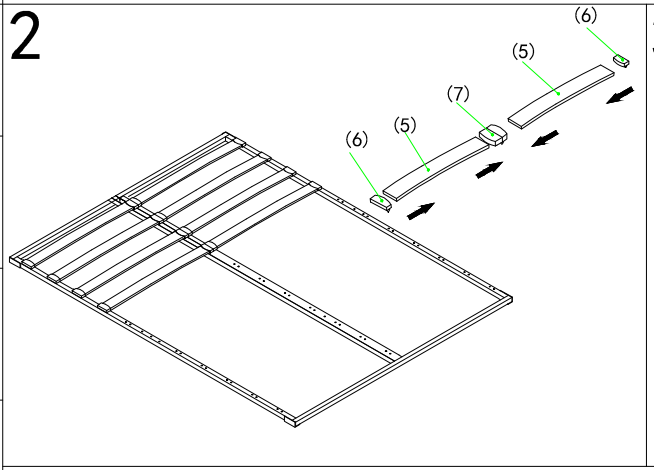

3

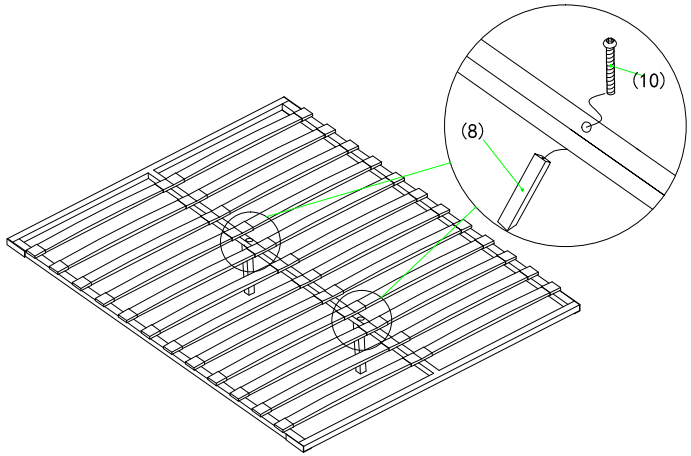

4

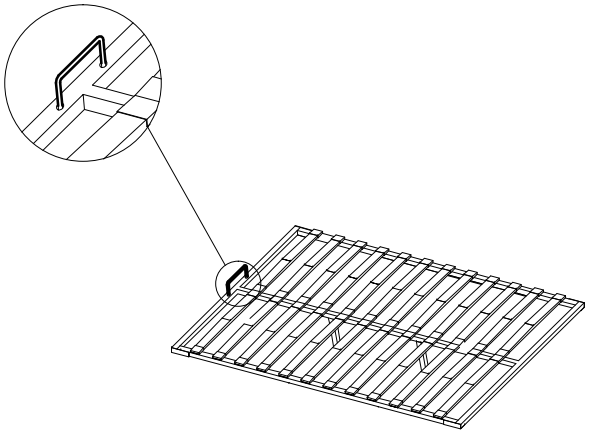
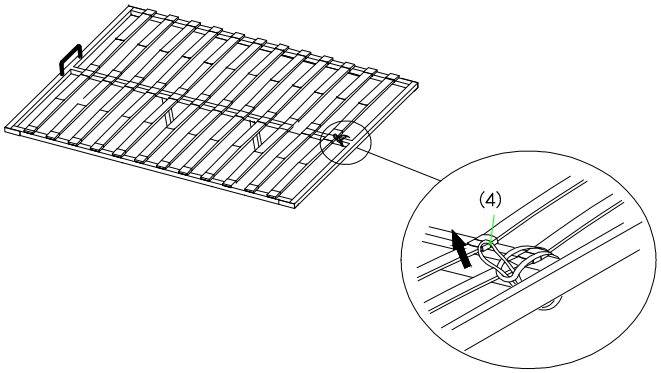
5